CUBIX

JIKA



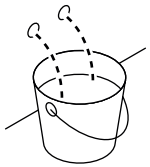

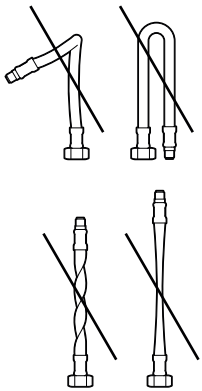

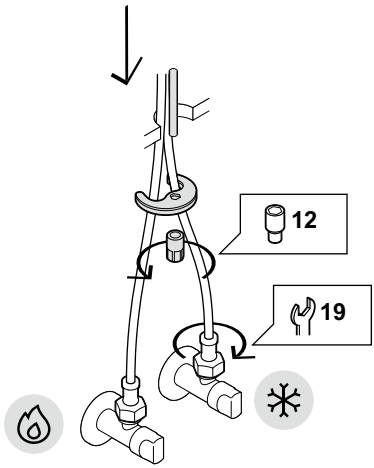

P bar





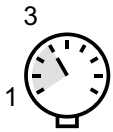



T ° C

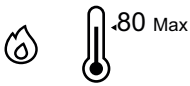





Q L/min
(3 bar)



5



5



8

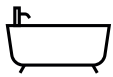

20

H3112I10041101
H3112I17161101

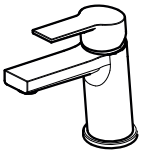

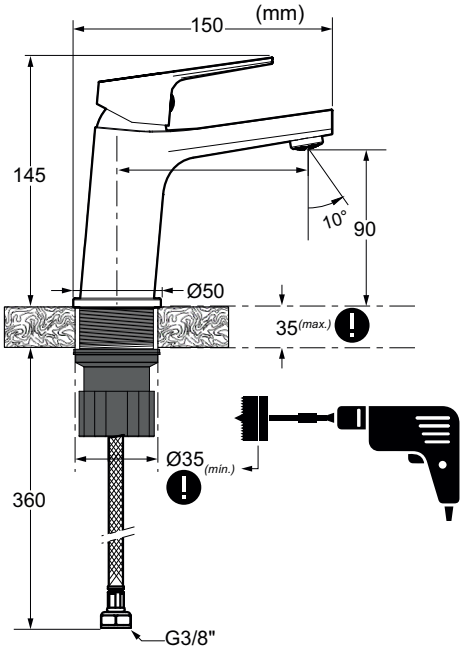

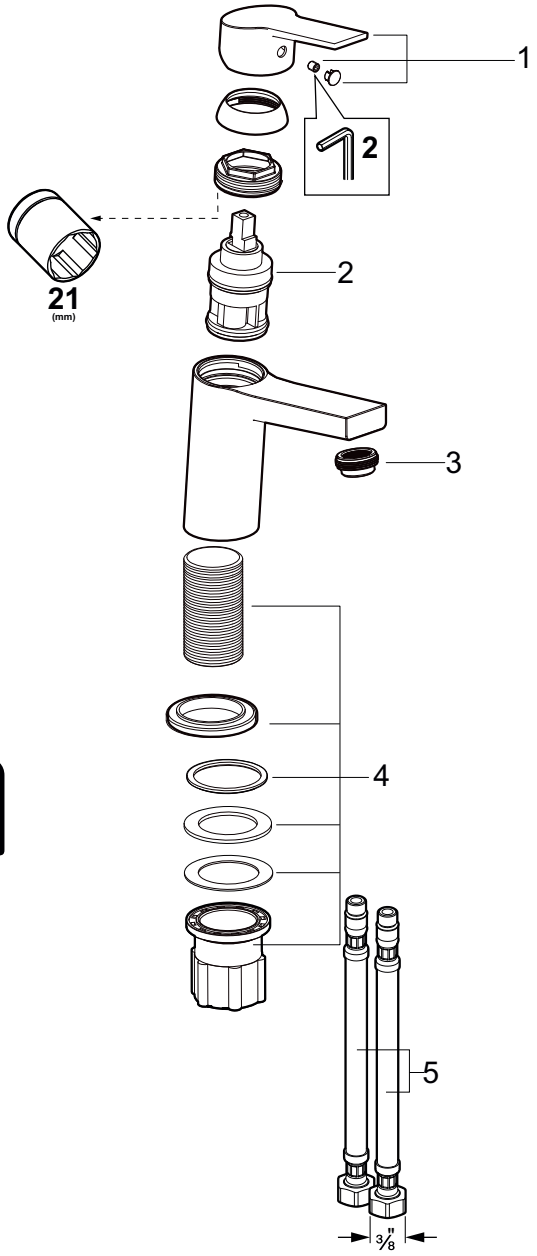

H3112I80041201
H3112I87161201

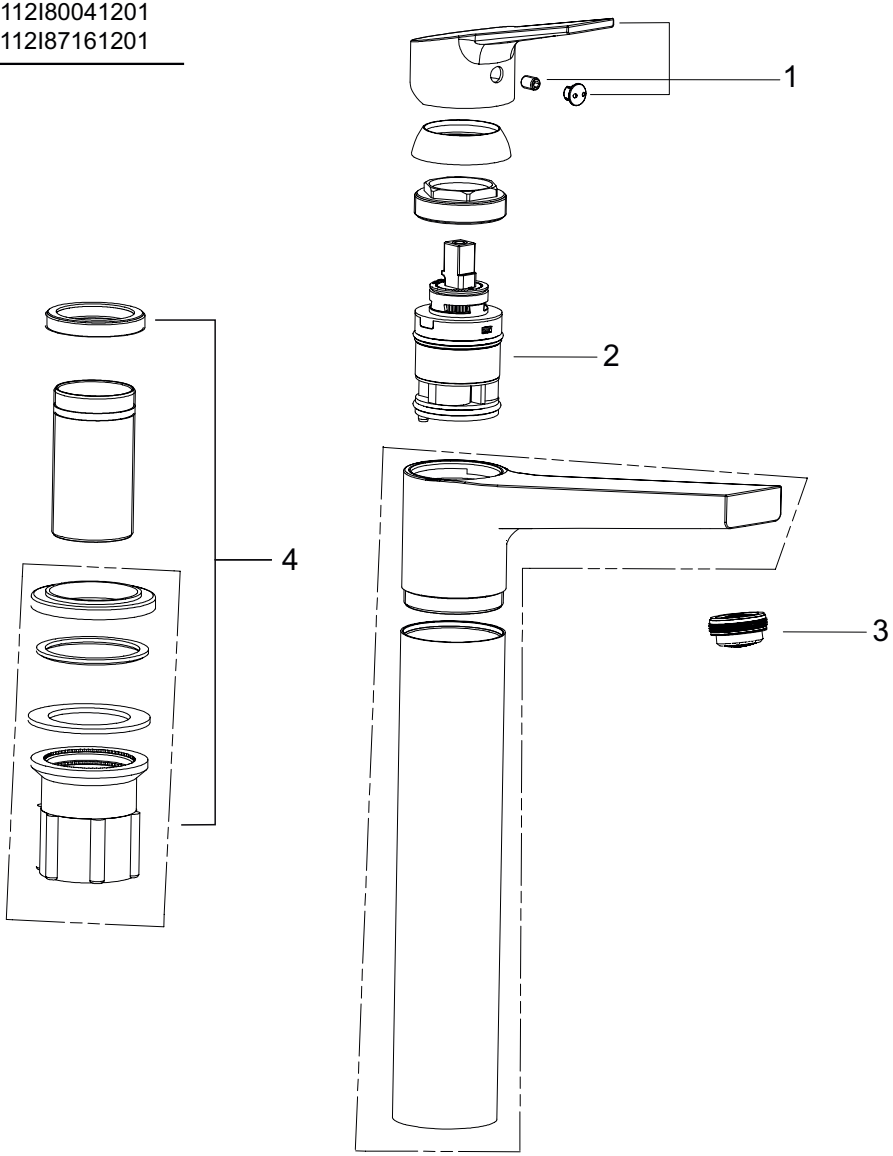

H3312I70041311
H3312I77161311

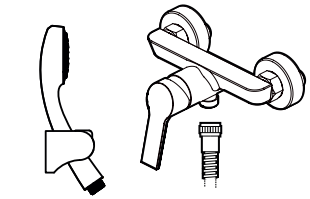

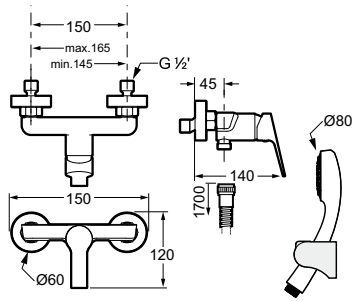

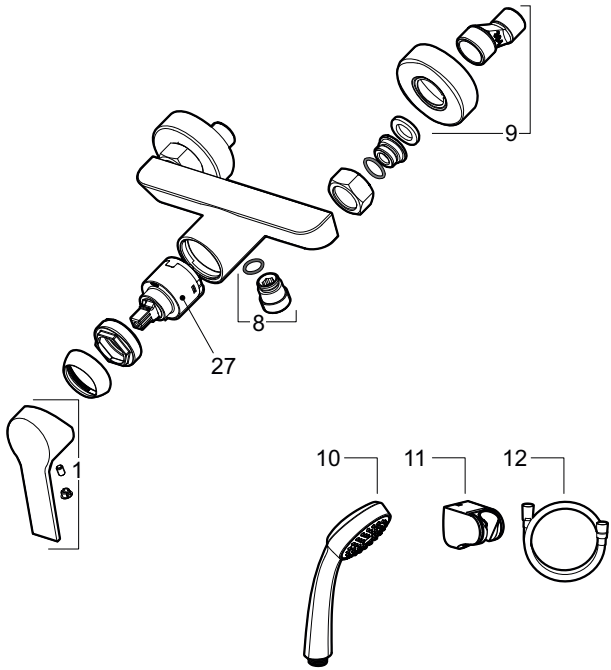

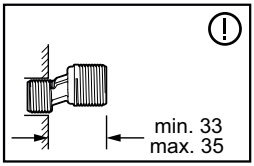

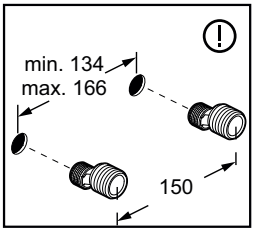

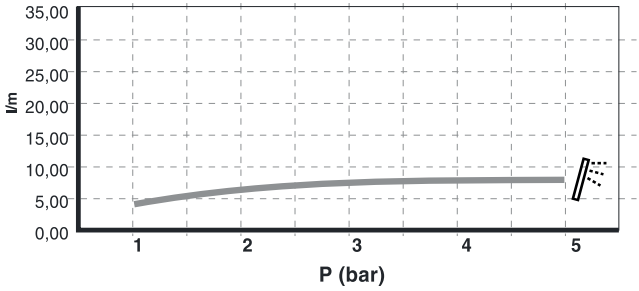

H3212I70041311
H3212I77161311

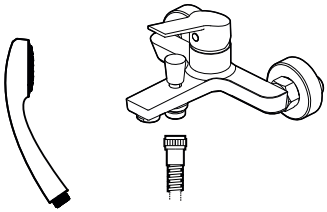

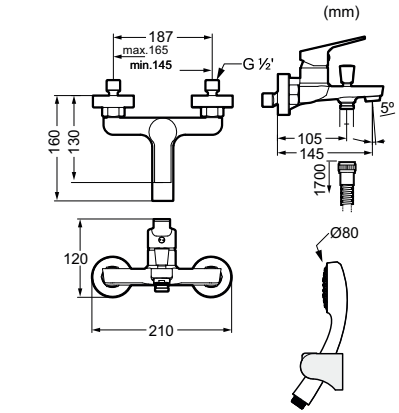

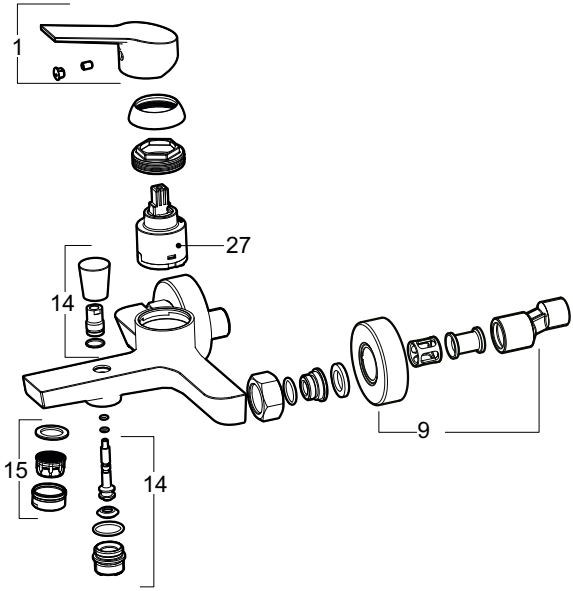

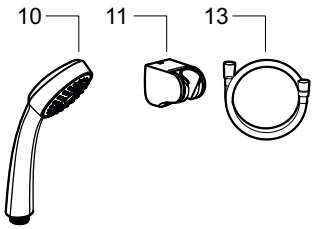

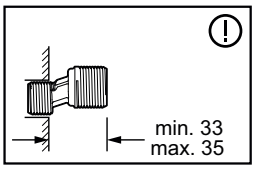

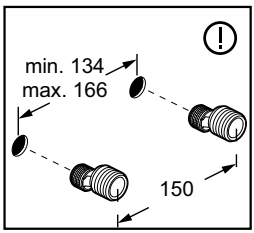

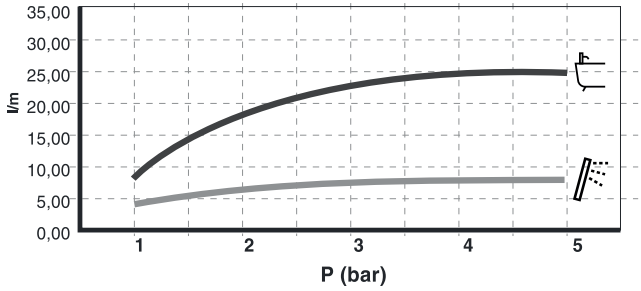

H3332I70045311
H3332I77165311

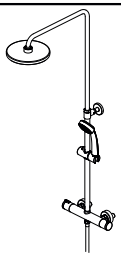

(mm)

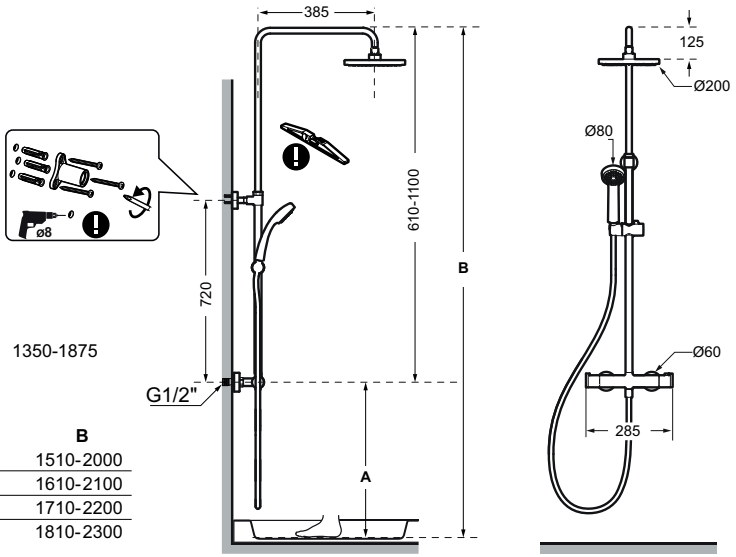

A	B
900	1510-2000
1000	1610-2100
1100	1710-2200
1200	1810-2300

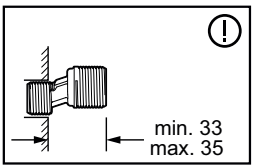

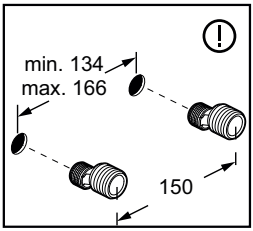

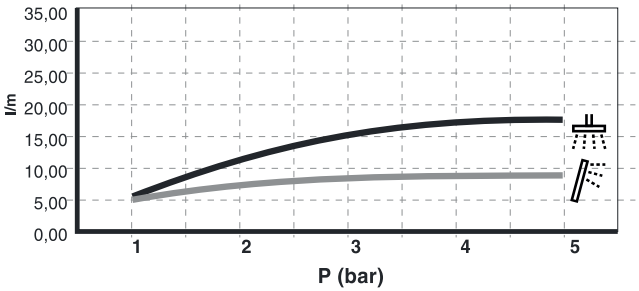

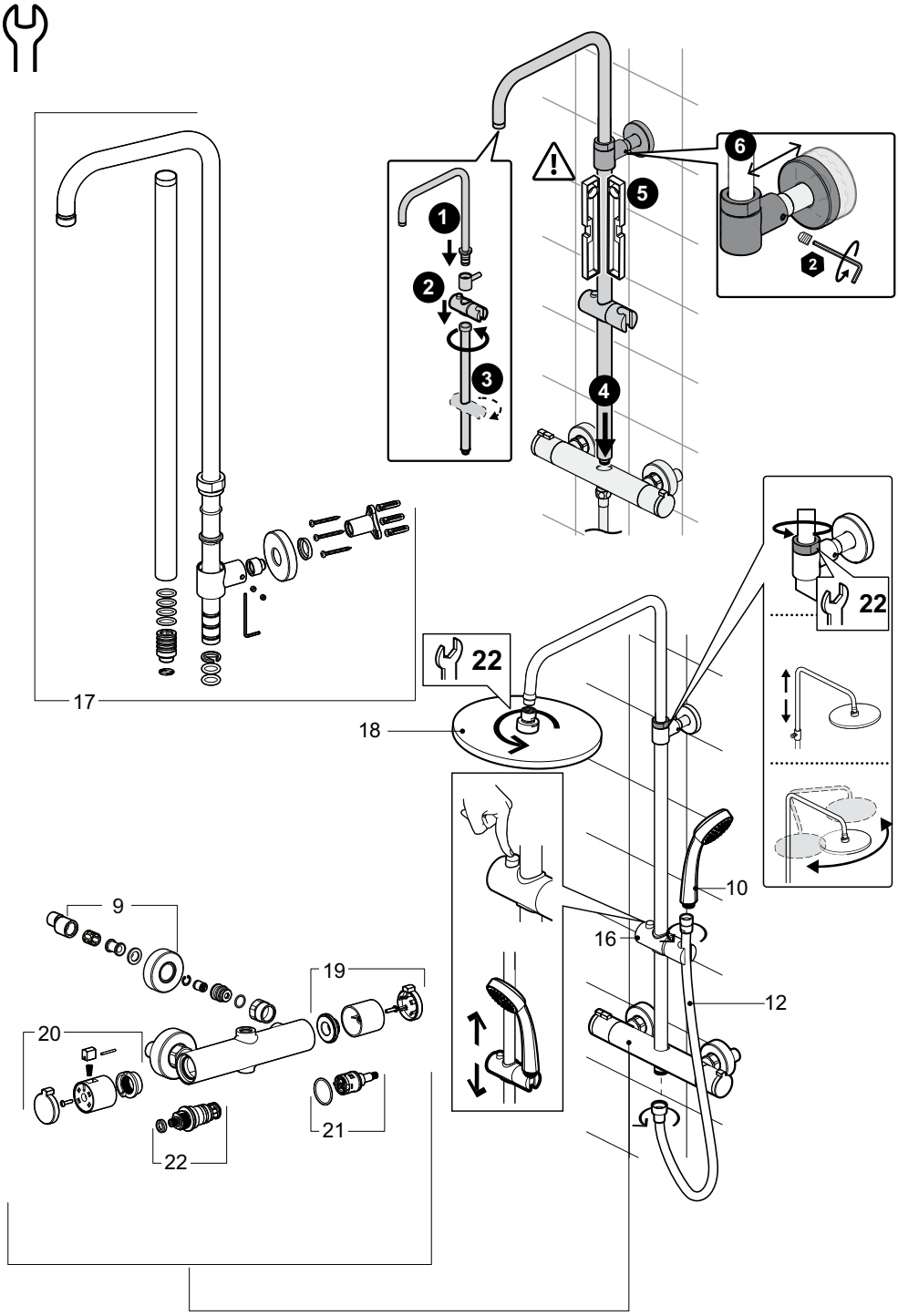
1
2
3
4
5
6
2
17
22
18
22
9
19
20
21
22
10
16
12

H3312I70045311
H3312I77165311

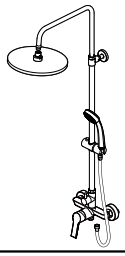

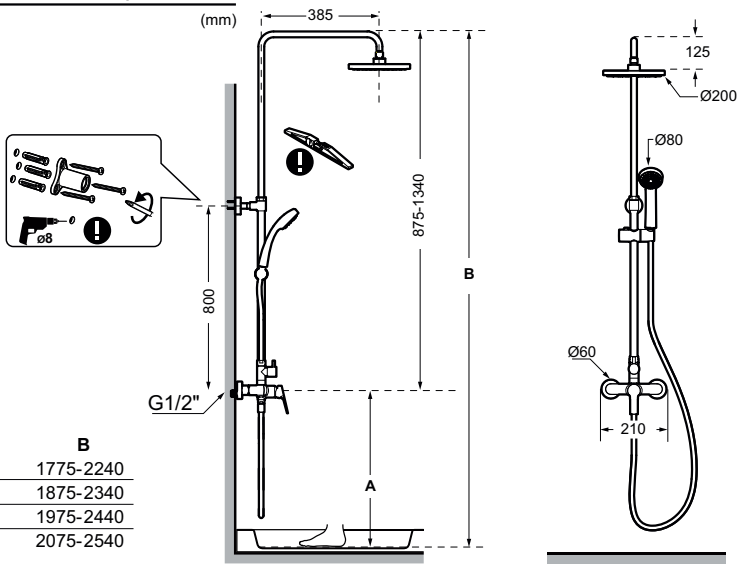

A	B
900	1775-2240
1000	1875-2340
1100	1975-2440
1200	2075-2540

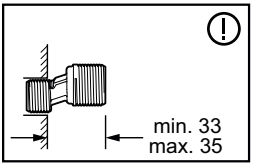

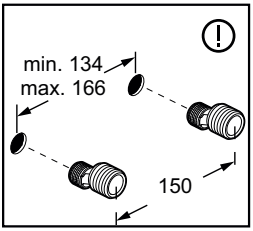

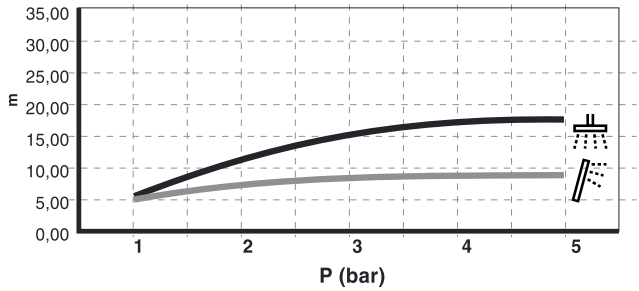

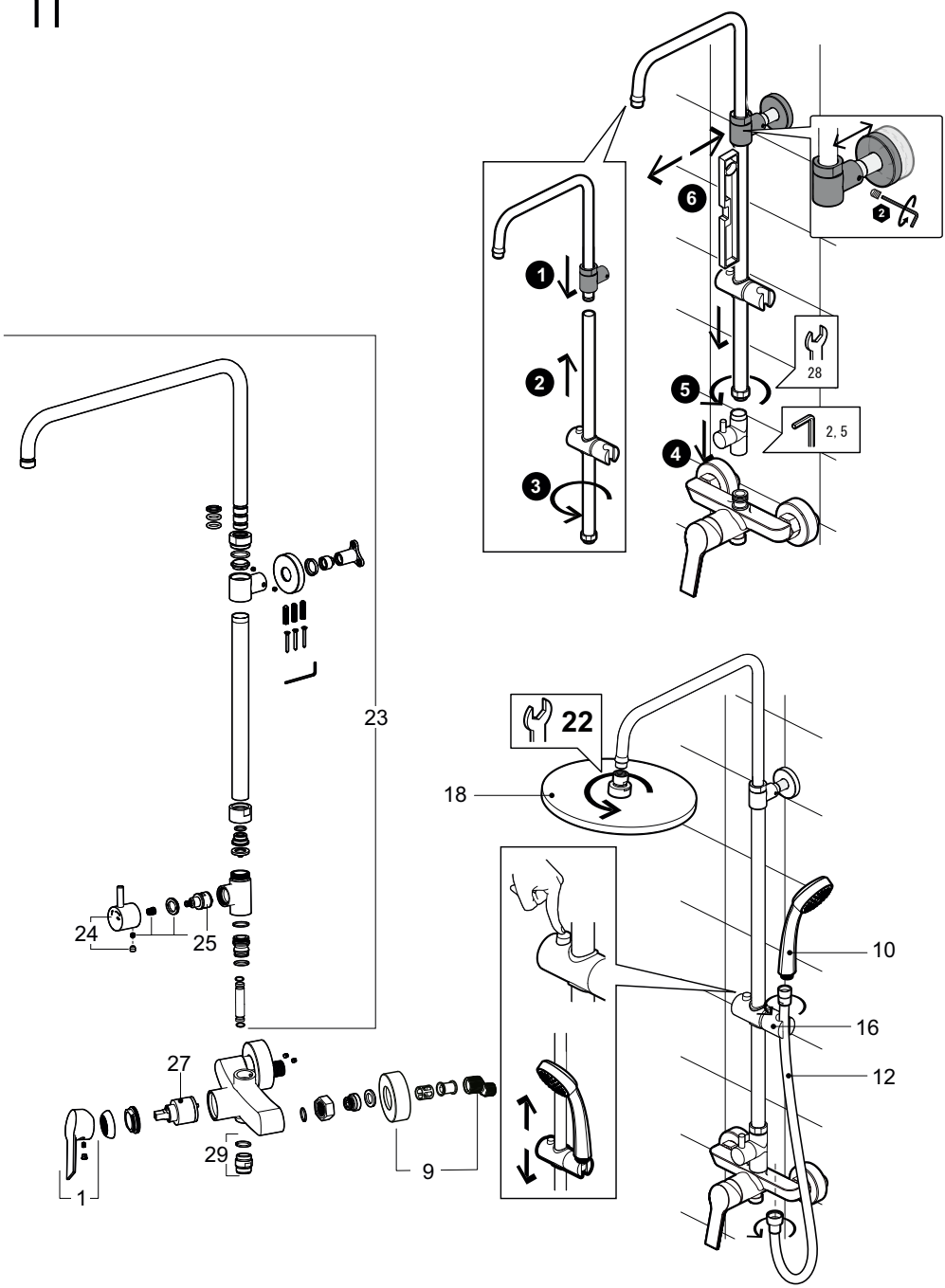
1
2
3
4
5
6
28
2, 5
22
18
23
24
25
27
29
9
10
16
12

H3512I17744201
H3512I17702201

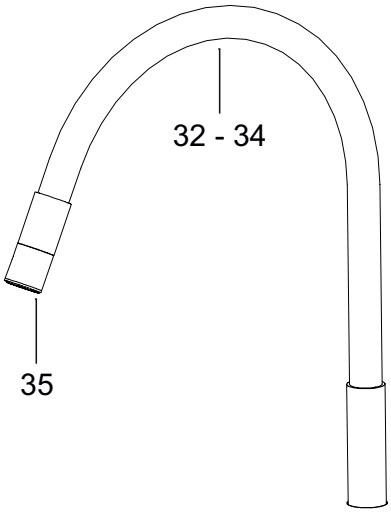

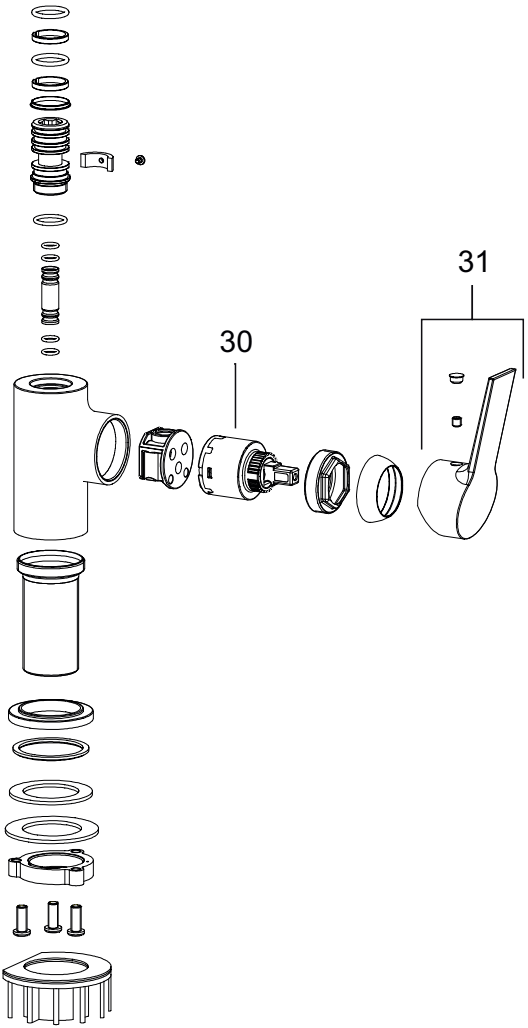

1 S502211000###00	27 SR5000000002319
2 S50221200000000	28 SR5000000002320
3 S50221300000000	29 S502233000###00
4 S502214000###00	30 XXXXXXXXXXXXX
5 S50221500000000	31 XXXXXXXXXXXXX
6 S502216000###00	32 XXXXXXXXXXXXX
7 S502217000###00	33 XXXXXXXXXXXXX
8 S502218000###00	34 XXXXXXXXXXXXX
9 S502219000###00	35 XXXXXXXXXXXXX
10 S502220000###00	
11 S502221000###00	
12 S502222000###00	
13 S502223000###00	
14 S502224000###00	
15 S502225000###00	
16 S502226000###00	
17 S502209000###03	
18 S502227000###00	
19 S502228000###00	
20 S502229000###00	
21 S50223000000000	
22 S50223100000000	
23 S502209000###04	
24 S502232000###00	
25 SR5000000002321	
26 SR5000000002318	

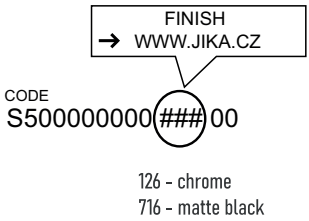

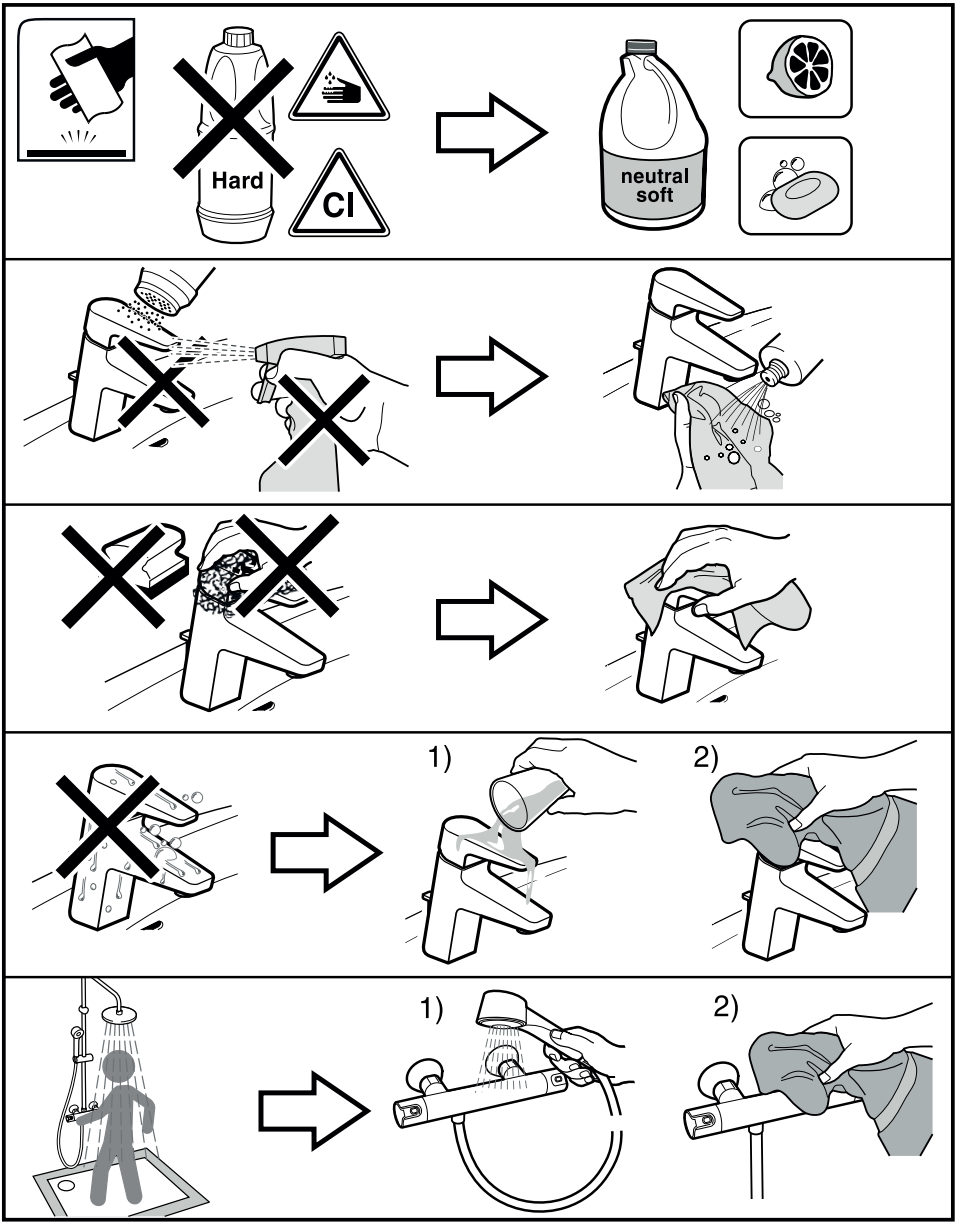

LAUFEN CZ s.r.o.
Prúmyslová 709/14
Znojmo, 669 02
Ceska republika
Fax: +420/296 337 713
e-mail: marketing@cz.laufen.com
www.jika.cz

JIKA